KELLER KIRCHBERG

ABAC AIR COMPRESSORS

ERSATZTEILE

KOMPRESSOR ABAC P55

Ed. Keller AG
Gerenstrasse 23
CH - 9533 Kirchberg SG

info@keller-kirchberg.ch
T +41(0)71 932 10 50
F +41(0)71 932 10 51

Model: POLE POSITION L30P (ABAC)
Code: 1129100045
Valid from: 01/04/2017
Tav.: **1129100045_00**

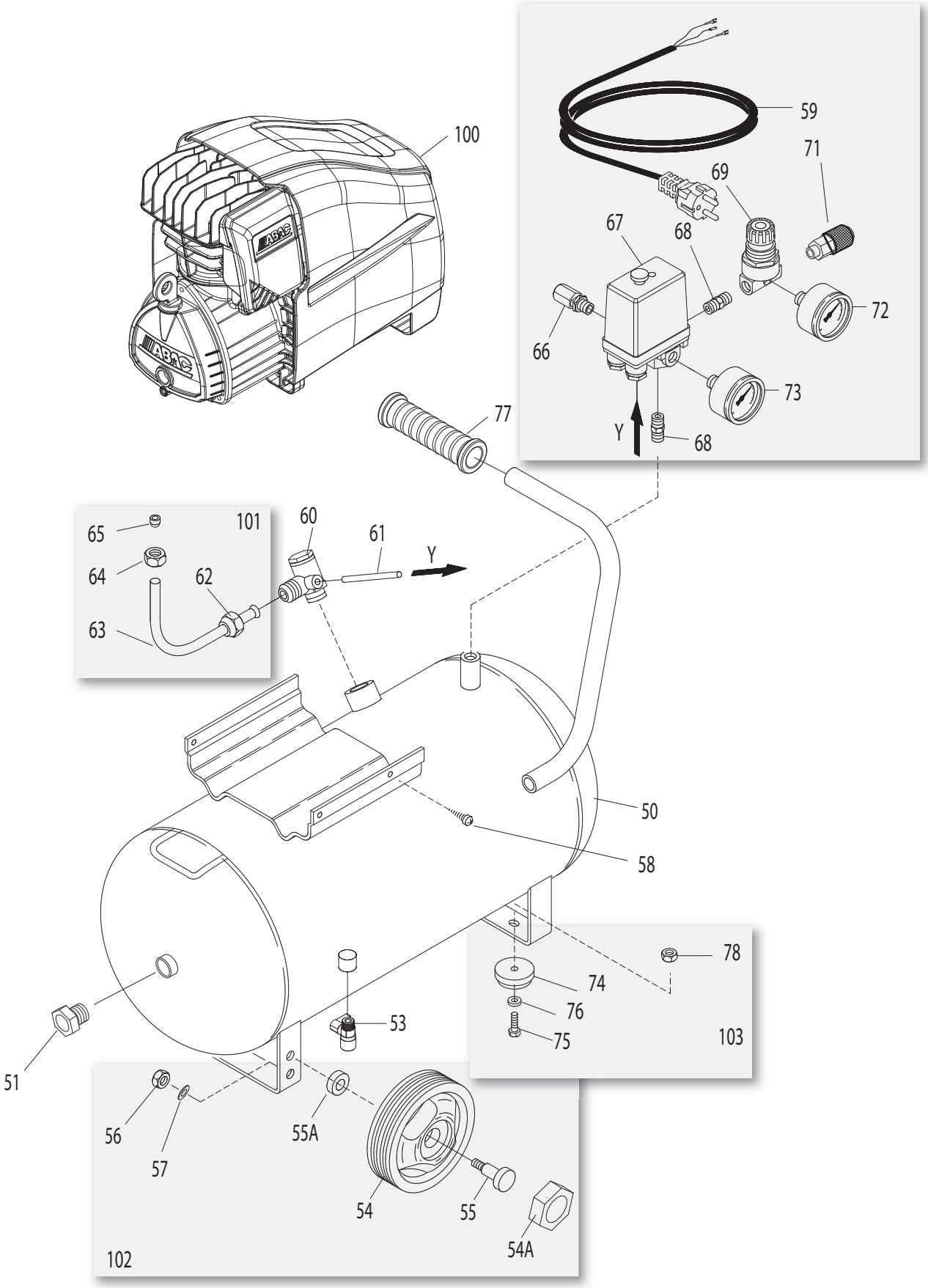

Model: POLE POSITION L30P (ABAC)
Code: 1129100045
Valid from: 01/04/2017
Tav.: **1129100045_00**

N°	Code	Q.ty	Q.ty*	Description	N°	Code	Q.ty	Q.ty*	Description
50	1129703763	1		SERBATOIO 24L TANK	102	1129703749	1		KIT RUOTA KIT
51	1129102504	1		TAPPO 1/2"G PLUG	103	1124080861	1		KIT GOMMINO KIT
53	1129701574	1		RUBINETTO SFERA 3/8" TAP					
54	1129703748	2		RUOTA D150 WHEEL					
54A	1129703580	2		COPERCHIO RUOTA WHEEEL COVER					
55.	X	2		VITE D16× M10 SCREW					
55A.	X	2		RONDELLA WASHER					
56.	X	2		DADO M10 NUT					
57.	X	2		RONDELLA D10 WASHER					
58.	X	4		VITE ST5X20 SCREW					
59	1129100092	1		CAVO ALIMENTAZIONE POWER CABLE					
60	1129102501	1		VALVOLA DI RITEGNO CHECK VALVE					
61	1127230001	1		TUBO RILSAN D6 RILSAN TUBE					
62	1129700328	1		DADO 1/2"G NUT					
63	1127230166	1		TUBO ALIMENTAZIONE D14 INFEED HOSE					
64	1129700326	1		DADO 1/2"G NUT					
65	1127040117	1		OGIVA OGIVE					
66	1127190227	1		VALVOLA DI SICUREZZA 10 RELIEF VALVE					
67	1129700388	1		PRESSOSTATO CE PRESSURE SWITCH					
68	1129700330	2		RACCORDO FITTING					
69	1127100064	1		RIDUTTORE DI PRESSIONE PRESSURE REDUCER					
71	1129700276	1		RUBINETTO UNIVERSALE TAP					
72	1127110003	1		MANOMETRO D40 PRESSURE GAUGE					
73	1127110004	1		MANOMETRO D50 PRESSURE GAUGE					
74	1127360009	2		GOMMINO PIEDE RUBBER FOOT					
75.	X	2		VITE M6 SCREW					
76.	X	2		RONDELLA D6 WASHER					
77	1129100860	1		MANOPOLA KNOB					
78.	X	2		DADO M6 NUT					
100	1129102621	1		GRUPPO POMPANTE PUMP UNIT					
101	1129704854	1		TUBO ALIMENTAZIONE KIT INFEED HOSE					

Q.ty = Quantità unitaria / Single unit quantity / Quantité unitaire / Cantidad unitaria / Einzeleinheitsmenge
Q.ty* = Ricambi consigliati in percentuale / Suggested spare parts in percentage / Pièces de rechange suggérées en pourcentage / Piezas de repuesto sugeridas en porcentaje / Vorgeschlagene Ersatzteile in Prozent

Model: POLE POSITION L30P (ABAC)
Code: 1129100045
Valid from: 01/04/2017
Tav.: **1129102621_00**

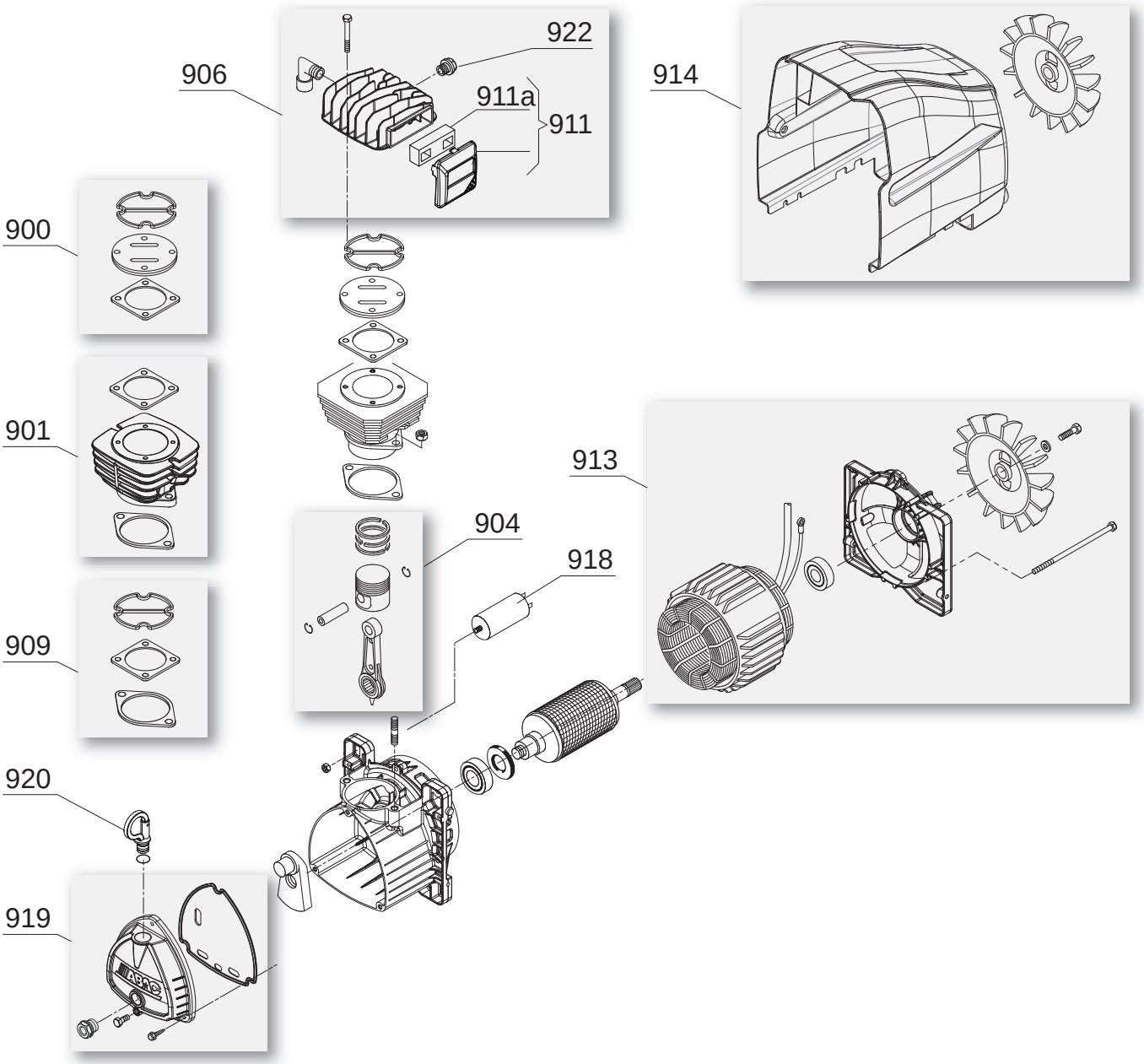

Model: POLE POSITION L30P (ABAC)
Code: 1129100045
Valid from: 01/04/2017
Tav.: **1129102621_00**

N°	Code	Q.ty	Q.ty*	Description	N°	Code	Q.ty	Q.ty*	Description
900	1124080123	1		KIT PIASTRA VALVOLE VALVE PLATE KIT					
901	1124080148	1		KIT CILINDRO KIT					
904	1129704049	1		KIT BIELLA/PISTONE CON ROD-PISTON KIT					
906	1129703757	1		KIT TESTA HEAD KIT					
909	1124080147	1		KIT GUARNIZIONI GASKETS KIT					
911	1124080140	1		KIT FILTRO KIT					
911a	2234900062	1		ELEMENTO FILTRO FILTER CARTRIDGE					
913	1124080145	1		KIT STATORE KIT					
914	1124080146	1		KIT CARENA-VENTOLA KIT					
918	1127310055	1		CONDENSATORE CONDENSER					
919	1129703759	1		KIT COPERCHIO CARTER KIT					
920	1129703762	1		TAPPO OLIO PLUG					
922	1129100429	1		VALVOLA START START VALVE					

Q.ty = Quantità unitaria / Single unit quantity / Quantité unitaire / Cantidad unitaria / Einzeleinheitsmenge
Q.ty* = Ricambi consigliati in percentuale / Suggested spare parts in percentage / Pièces de rechange suggérées en pourcentage / Piezas de repuesto sugeridas en porcentaje / Vorgeschlagene Ersatzteile in Prozent